View from Top side (Scale 3:2)

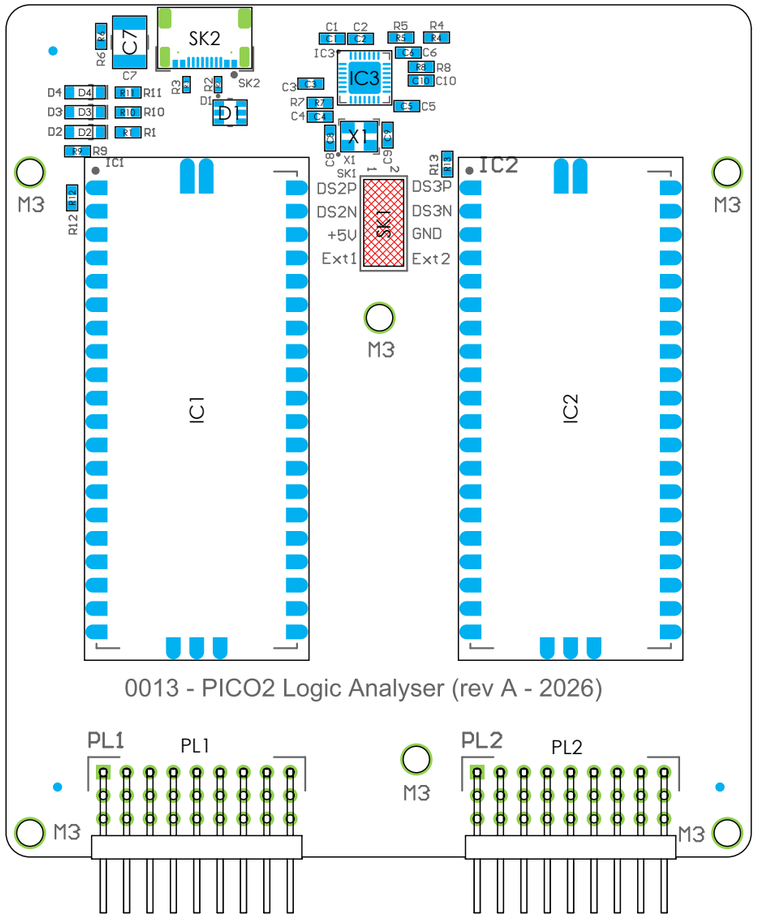

Realistic View

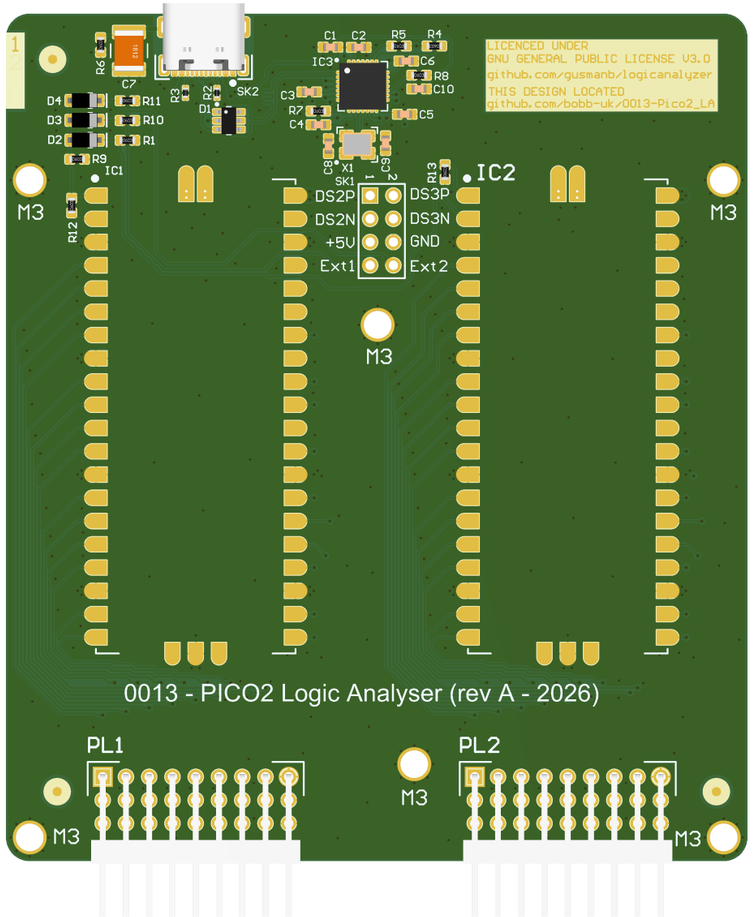

Bill Of Materials

Designator	Name	Quantity	M1	M1 PN	M2	M2 PN
C1	CAP-2u2F-10%-16V-X5R-0603	1	Yageo	CC0603KRX5R7BB225	Murata	GRM188R61E225KA12D
C2, C3, C4, C5, C6, C10	CAP-100nF-10%-50V-X7R-0603	6	Yageo	CC0603KRX7R9BB104	Kemet	C0603C104K5RACTU
C7	CAP-4n7F-10%-250V-X7R 1812	1	Yageo	CC1812KKX7RYBB472	Murata	GA343DR7GD472KW01L
C8, C9	CAP-18pF-5%-50V-COG-0603	2	Yageo	CC0603JRNPO9BN180	Murata	GRM1885C2E180JW07D
D1	ESD 15/ 8kV	1	Wurth Electronics	824015		
D2, D3, D4	MBR0520LT1G	3	ON SEMI	MBR0520LT1G		
IC1, IC2	RasPi PICO2	2				
IC3	IC USB CY7C65642-28LTXCT	1	Infineon	CY7C65642-28LTXCT		
PL1, PL2	CONN 27W 2.54P 9x3 PTH RA TIN	2	Samtec	TSW-110-08-T-T-RA		
R1, R8, R9, R10, R11	RES-10K-1%-0.1W-0603	5	Yageo	RC0603FR-0710KL	Panasonic	ERJ-3EKF1002
R2, R3	RES-5K1-1%-0.063W-0402	2	Yageo	RC0402FR-075K1L	Panasonic	ERJ-3EKF5101
R4, R5	RES-100K-1%-0.1W-0603	2	Yageo	RC0603FR-07100KL	Panasonic	ERJ-3EKF1003
R6	RES-1M-1%-0.1W-0603	1	Yageo	RC0603FR-071ML	Panasonic	ERJ-3EKF1004
R7	RES-649R-1%-0.1W-0603	1	Yageo	RC0603FR-07649RL	Panasonic	ERJ-3EKF6490
R12, R13	RES-0R-1%-0.1W-0603	2	Yageo	RC0603JR-070RL	Panasonic	ERJ-3GEY0R00
SK2	CONN USB2.0 SKT TYPE C HORIZ	1	GCT	USB4105-GF-A-120		
X1	XTAL 12Mhz WE-XTAL	1	Wurth Electronics	830070868		

UNLESS OTHERWISE SPECIFIED:
DIMENSIONS ARE IN MILLIMETERS
SURFACE FINISH:
TOLERANCES: LINEAR: ANGULAR:

DEBURR AND BREAK SHARP EDGES

REV	DRAWN	CHECKED	ECO	DATE
A	RB	See Arena	IER-000nnn	26/02/2026

TITLE: PICO2 48ch Logic Analyser assy drw

DWG N0. 0013

SHEET 1 OF 1

A3